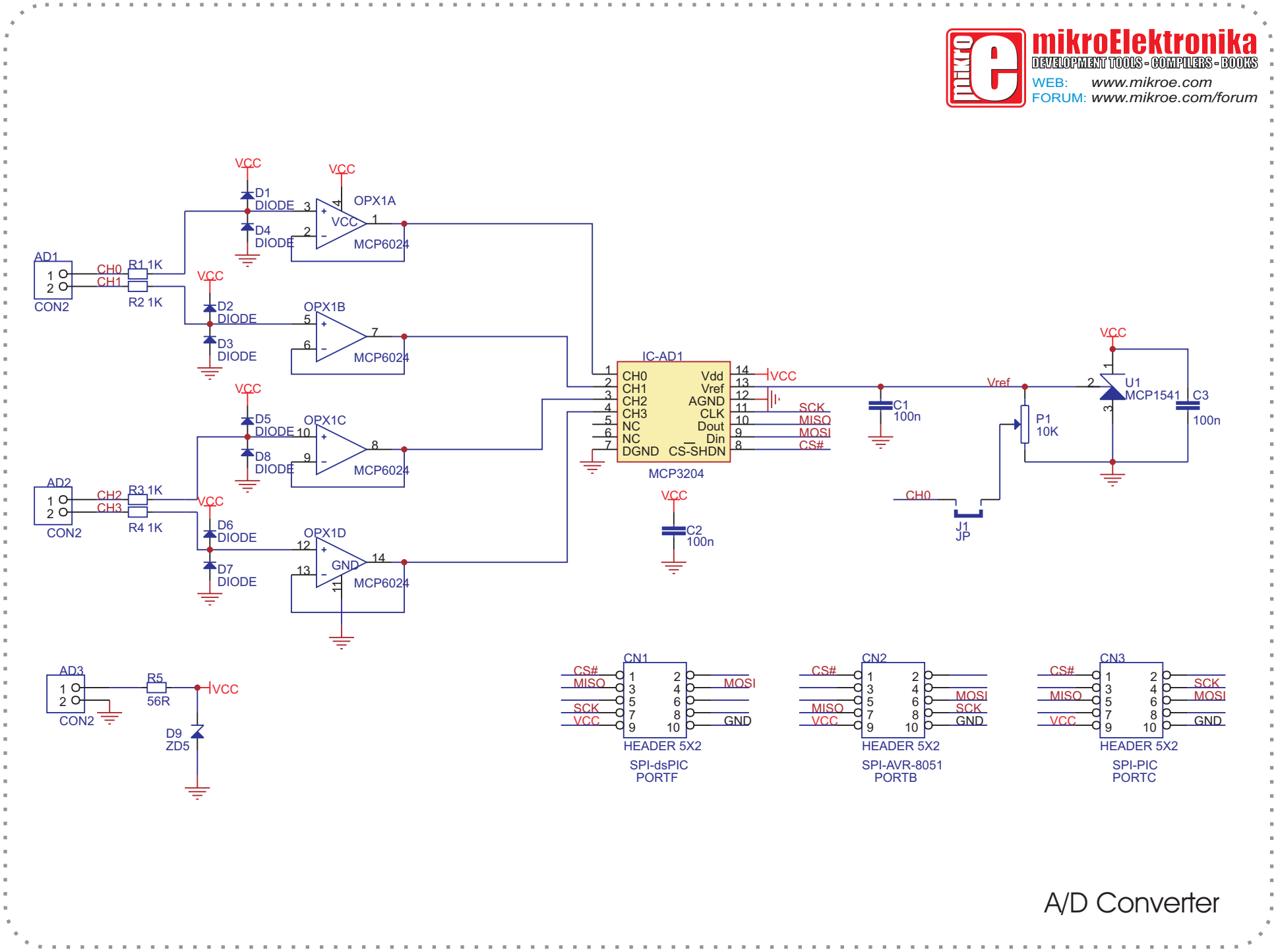
mikroElektronika
DEVELOPMENT TOOLS - COMPILERS - BOOKS
WEB: www.mikroe.com
FORUM: www.mikroe.com/forum
VCC
D1 DIODE
D4 DIODE
OPX1A
MCP6024
AD1
CON2
CH0
CH1
R1 1K
R2 1K
D2 DIODE
D3 DIODE
OPX1B
D5 DIODE
D8 DIODE
OPX1C
AD2
CH2
CH3
R3 1K
R4 1K
D6 DIODE
D7 DIODE
OPX1D
GND
IC-AD1
CH0
CH1
CH2
CH3
NC
NC
DGND
Vdd
Vref
AGND
CLK
Dout
Din
CS-SHDN
MCP3204
SCK
MISO
MOSI
CS#
C1 100n
C2 100n
Vref
P1 10K
U1 MCP1541
C3 100n
CH0
J1 JP
AD3
R5 56R
D9 ZD5
CN1
CN2
CN3
HEADER 5X2
SPI-dsPIC PORTF
SPI-AVR-8051 PORTB
SPI-PIC PORTC
A/D Converter
MikroElektronika Development systems